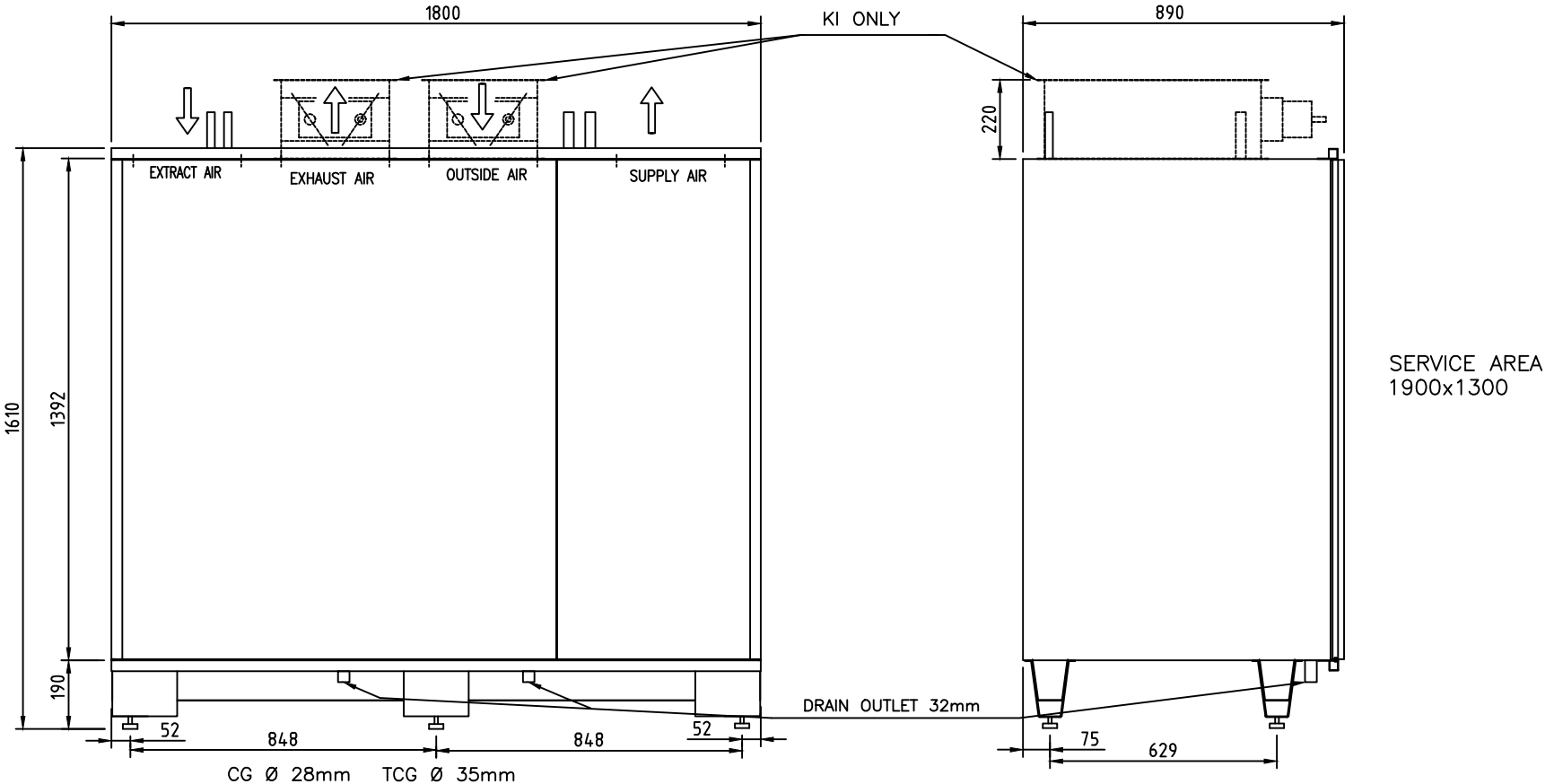

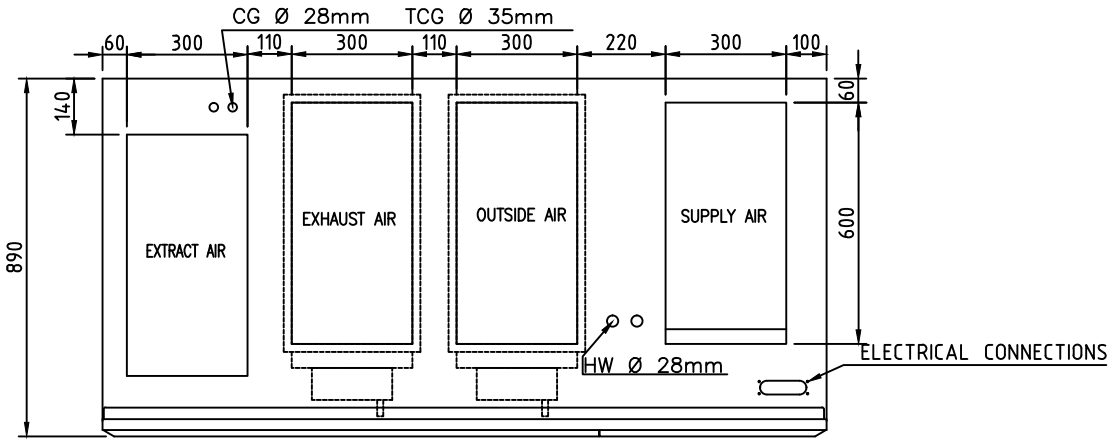

SERVICE HATCH

YLEISTOLERANSSIT

Hitsatut rakenteet:
EN ISO 13920–AE

Koneistetut osat:
ISO 2768–mK

Item	Quantity	Title/Name, designation, material, dimension etc	Article no./Reference

Designed by	Checked by	Approved by		Filename	Date	Scale
J.T				CAD–KUVAT/PALLAS	20131203	1:8

PALLAS	Title/Name DIMENSION DRAWING	Weight kg
Ensto Enervent Oy Kipinätie1, FIN– 06150 PORVOO Tel. +358–207–528800, enervent@ensto.com	Drawing number PALLAS–001	Edition A / Sheet 1

Rev	Revision note	Date	Signature	Checked